E15
AGITATOR 7M³

Elphinstone Underground Support Solutions
elphinstone.com

ELPHINSTONE
UNDERGROUND RELIABILITY

TA136
ELPHINSTONE
E15

OUTSTANDING RIDE AND HANDLING WITH EXCELLENT MANOEUVRABILITY.

Reliability and performance in harsh conditions

The E15 Agitator 7m³ is built to thrive in harsh underground hard rock mining conditions, providing outstanding ride and handling with excellent manoeuvrability and turning circle.

Operator safety

With safety as a priority, the E15 is engineered with onboard machine diagnostics for rapid fault identification, increasing the availability and productivity of the machine.

The certified ROPS/FOPS air-conditioned operator cabin seats three persons comfortably. The ergonomic controls, central driving position, excellent 180 degree view, and LED lighting increase safety and reduce operator fatigue.

The oscillating hitch, nitrogen-charged front suspension (optional) and air-ride seats provide unrivalled comfort for the operator. The electromagnetic braking retarder, adjustable from the operator's seat, provides superior and reliable braking capability.

Maintenance and Serviceability

All service points such as tanks, filters, lubrication points and compartment drains are conveniently located at ground level for servicing.

Machine Application

Machine productivity is directly related to speed, capacity and reliability, all features considered by Elphinstone in the design of the Agitator. The Caterpillar powertrain provides haulage speeds on grade equivalent to production equipment resulting in maximum productivity across the mining fleet. The bowl has a maximum capacity of 7m³ and allows mixing of wet or dry product with variable speed control.

Contents

Structures, Work Tools and Attachments	4
Operator Environment	6
Safety Features	7
Engine	8
Powertrain	9
Product Features	10
Customer Support	12
Maintenance and Serviceability	12
Sustainability	13
Technical Specifications	14
Machine Dimensions	15
Standard and Optional Equipment	16

DELIVERING POWER AND CONTROL AT FULL CAPACITY.

Machine application

» Bulk transport of concrete to back fill voids.
» Transport of shotcrete to a shotcrete machine in a new development.
» Excellent top speed at full capacity improves the cycle time and allows the machine to travel at the same speed as the production fleet resulting in increased production.

Wet or dry product loading

The 7m³ (9.2yd³) capacity agitator bowl can handle wet or dry product due to the machines ability to program mix and transit speeds which results in greater mixing versatility.

Optional front and rear hydraulic jack legs

Optional front and rear jacks can be fitted. The front jacks have a park function to allow the operator to safely exit the cabin with machine running. The rear jacks provide stability when mixing and to raise the machine for discharge. All jacks can be utilised to raise the machine off the ground while changing tyres.

Dual loading access and fill chute camera

Loading of the agitator bowl can be achieved vertically via the chute or horizontally via conveyor (optional) with a mandatory high-mounted fill chute camera enabling a safe accurate approach.

Water and chemical agent tanks (optional)

An onboard stainless steel water tank enables alterations to the batch or water storage for wash down. The stainless steel chemical tank provides additional chemical agent transfer to the shotcreter.

Mixer

» Electro hydraulically controlled for mixing and unloading.
» A dial controller is located on the operator's armrest for retarder and implement control.
» Manual bowl controls and emergency stop located at the rear of the machine at ground level.
» Quick disconnect hydraulic fittings on bowl motor.
» Bolt on external bowl access covers.

Optional features:

» Air-ride seats for the operator are standard and optional for passengers.
» Front and rear hydraulic jack legs.
» Optional in-cab filtration complying with ISO 23875.
» Optional partial-flow DPF can be fitted in place of standard muffler on Tier 3 models.
» Chute extensions.
» Mounted camera provides view of the discharge chute.
» High volume, low pressure water pump and hose reel for agitator bowl washdown.
» Low volume high pressure water pump and hose reel for machine washdown.
» Slump meter.
» Hydraulically filled nitrogen-charged suspension cylinders.
» Tanks for chemical additive and water.
» Filtered hydraulic oil-filling system.

Refer to page 16 for a full list of standard and optional equipment)

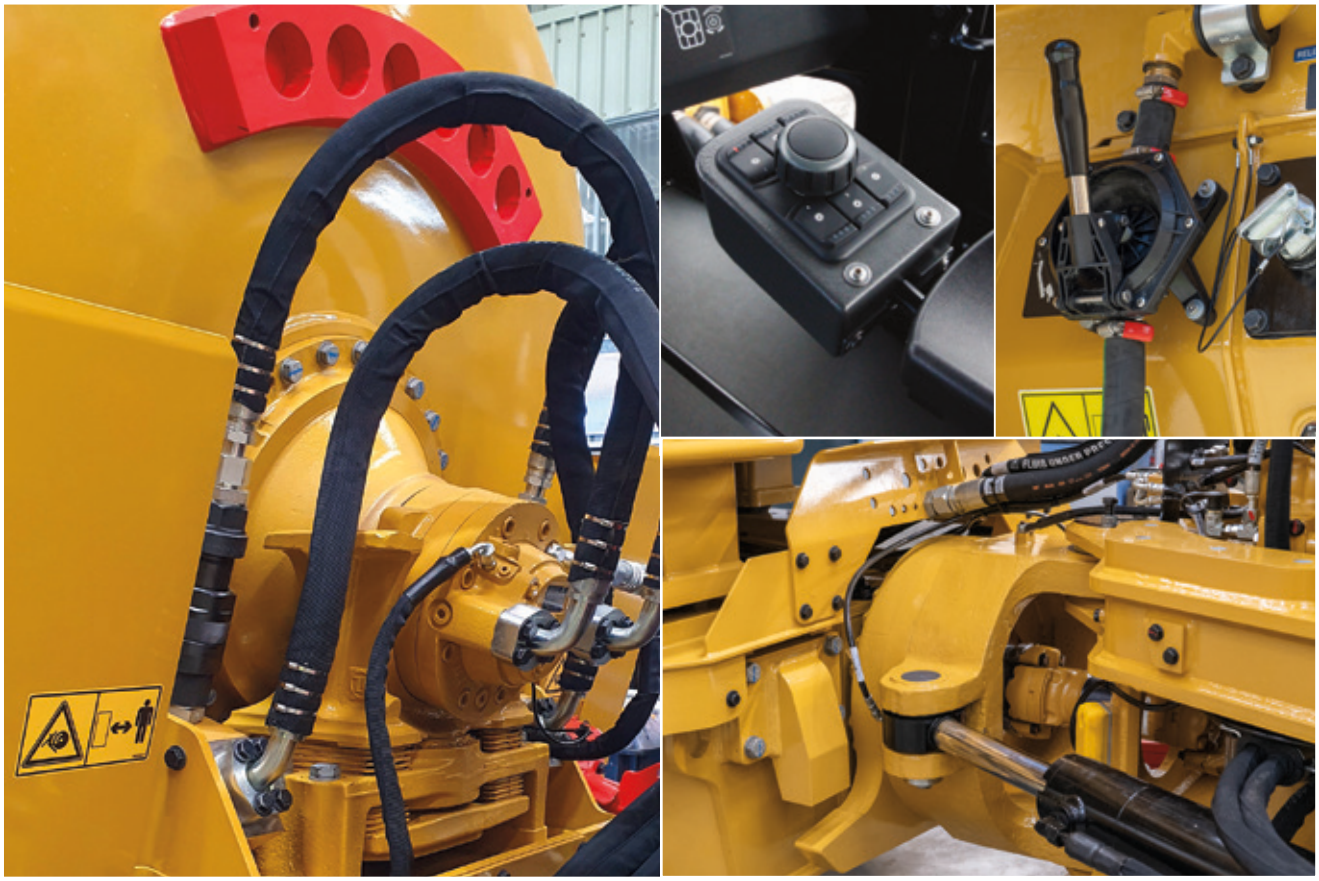

STRENGTH AND SUPERIOR BRAKING PERFORMANCE.

Heavy duty front frame

The robust, heavy-duty, and purpose design front frame utilises a high tensile steel construction with an average plate thickness of 20mm (0.80in). The frame design is common to both E15 front and E10 centre-mounted operator cabin along with the Tier 3 or Tier 4 engine options. Front suspension comes standard on the E15 while the E10 can be optioned with either front suspension or rigid axle.

The front suspension mounting points and fuel tank are incorporated into the common frame. The frame includes an access cover for cleaning and inspecting the fuel tank if required.

Common rear frame

The rear frame uses high tensile steel box section construction with an average thickness of 12mm (0.47in). The agitator bowl assembly is modular and pinned/bolted low in the frame reducing the overall length and centre of gravity.

Oscillating hitch

The oscillating hitch provides superior operator comfort, 4-wheel ground contact and reduced wear on the hitch and steering components. Includes a heavy duty deep frame section through oscillating hitch area with +/- 42.5° steering articulation and +/- 10° oscillation.

High-capacity Electromagnetic retarder

Fitted to the rear frame, the electronically controlled retarder provides superior braking performance on grade, featuring diagnostic capabilities with alarm and fault conditions reported back to the operator display.

The integrated Retarder Control System (iRCS) combines both the control and power functions into a single unit. The innovative electronic design significantly reduces the retarder's energy consumption, preserving electric circuits.

The retarder, factory set with a percentage of retardation, is controlled via an integrated multi-function joystick controller located on the operator's right-side armrest.

Speed Control

The intelligent grade-sensing electronic 'speed control' utilises the high-capacity retarder, engine speed, and the correct transmission gear to control speed while descending into the mine, hence reducing wear and tear on the service breaks, parts and components.

Agitator bowl transmission

The E15 agitator bowl features a transmission commonly used world wide in other cement mixing applications and has proven to be reliable and easily serviced.

Major advantages of the transmission include:

» Tougher more robust design leading to increased bearing life.
» Sealed for life servicing: reduced maintenance.
» Vibration isolation via elastomer pad results in improved driving comfort.
» Quick connect fittings on bowl motor for easy change over to auxiliary hydraulic power supply.
» Variable speed output ranging from 0-19 rpm.

COMFORTABLE AND EASY TO OPERATE.

Front mounted cab with 180 degree view

The E15 features an air-conditioned, 3-seat enclosed cabin (pictured above). The enclosed cabin features ergonomics for operator comfort, user-friendly intuitive controls, and excellent 180-degree view.

The cabin includes the following features:

» Front-mounted to machine.
» ROPS/FOPS certified design.
» 300mm (12in) touch screen operator display.
» Fingertip controls mounted to operators seat.
» 3 full size seats. Air-ride suspension seat standard for driver, non-suspended seats for occupants. Optional Air-ride suspension seats for all persons.
» Air conditioning and cab pressurisation.
» Air-cooled compartment for lunch box storage, cupholders and smartphone charging ports.
» Seat belts with occupant detection systems on operator seat.
» Emergency stop inside cab.

Integrated multi-function joystick controller

The operator's right arm rest features an integrated multi-function joystick controller providing finite control in transit for agitator speed and adjustment of retardation braking.

Transmission controls

The keypad transmission control is conveniently located near the operator's right hand, with forward and reverse gears changed effortlessly with finger touch accuracy reducing driver fatigue.

High level of operator comfort

The A-frame front axle suspension, oscillating hitch, and air-suspended seats deliver a high level of machine comfort to the operator and passengers.

The oscillating hitch ensures 4-wheel ground contact and reduced wear on the hitch and steering components. Nitrogen-charged hydraulic suspension cylinders and A-frame provide superior front axle ride quality over rough terrain.

Touch screen operator display

The 300mm (12in) touch screen displays vital machine status information. Data collected includes engine coolant and transmission oil temperature, pitch and roll indicators, engine oil pressure, engine speed, an integrated camera system (up to 4x), and vehicle speed and fuel level.

Advanced Machine Diagnostics

Elphinstone's advanced onboard machine diagnostics system continuously monitors all critical machine functions and system status. The operator's dash includes a user-friendly troubleshooting section for rapid fault identification, increasing the availability and productivity of the machine.

Machine health monitoring system

The monitoring system and alarm strategy provides a 3-tier warning and shutdown functionality alerting the operator of any abnormalities and automatically limits the machine's functions.

OPERATOR SAFETY IS OUR PRIORITY.

Machine isolation

All engine and machine isolation functions are conveniently located on one panel accessible from ground level. Switches have been designed to incorporate the requirement for the site tag in/out machine isolation process.

» Battery isolation switch.
» Starter isolation switch.
» Jump start receptacle.
» Fire system activation (optional).

Cabin protective structure

The operator cabin has an integrated Rollover Protective Structure (ROPS) certified to ISO 3471:2008 and Falling Object Protective Structure (FOPS) certified to ISO 3449:2005.

Speed control

The E15 also features intelligent electronic 'speed control' which utilises the high-capacity electromagnetic driveline retarder, engine speed, and the correct transmission gear to control speed while descending into the mine, hence reducing wear and tear on the service breaks, parts and components. When on flat ground the operator can accelerate over the maximum set speed, but when the accelerator pedal is released, the machine speed will revert to the original maximum speed setting.

Steering

Full hydraulic controlled steering via opposed cylinders at the oscillating hitch. Secondary emergency steering is also provided as standard. Steering system meets ISO 5010:2007.

Braking

Service brakes are hydraulic applied wet disc brakes. Emergency brakes are spring applied hydraulic release at the wheel ends. Braking systems meet ISO 3450:2011.

Machine Access

Handrails are fitted standard in accordance with ISO 2867:2011. All handrails are painted green and designed for 3-point access to cab and machine.

Additional safety features

» Anti-skid step surfaces.
» Inertia reel retractable seat belt.
» Steering frame lock.
» Electrical wiring segregation from all hydraulic hosing.
» Ground level access allows safe and convenient servicing to tanks, filters, lubrication points and compartment drains.
» Fire resistant sheathing on electrical harnesses and fuel lines.
» Firewall/heatshields.
» 4 Pole machine isolators (Battery and Starter) for additional protection.
» Integrated fire suppression systems (optional).
» Hydraulic hosing covered with burst protection sleeves.
» Operator presence systems.
» Door lighting for better step visibility.
» Window egress cord for ease of cab window removal.
» High-mounted fill chute camera (standard).
» Rear view camera.
» Park brake interlocking.
» Front jacks operate with a "park" function to enable the operator to safely exit the cabin with the engine operating.
» Bowl lifting points and bowl rotation.
» Additional cab pressurisation with HEPA filter to comply with ISO 23875:2023.

DELIVERS POWER, PERFORMANCE AND DURABILITY.

C7.1 engine

The Cat C7.1 uses Caterpillar's breakthrough ACERT™ Technology to meet exhaust emission reduction standards. It features efficient fuel delivery, air management and electronic control for high productivity and exceptional service life.

The C7.1 ACERT Tier 3 engine arrangement rated at 168 kW (228 hp) is standard for regions that may not have Ultra Low Sulphur Fuel or more stringent emission regulations. An optional diesel particulate filter can be fitted.

The C7.1 ACERT Tier 4 Final engine arrangement is available as an option, adhering to EU Stage IV exhaust emission standards. This arrangement is rated at 151kW (202 hp).

ADEM A4 engine control module

The ADEM A4 module controls the fuel injector solenoids to monitor fuel injection. It also provides automatic altitude compensation, and will not allow the engine to start until it has oil pressure, acting as cold start protection and a form of pre-lube.

Maintenance

The C7.1 engine reduces costs and downtime with 500-hour oil change intervals. The E15 is equipped with Caterpillar high efficiency oil filters, a design which doubles efficiency without increasing the change interval.

Engine protection system

An engine protection system is fitted that will shut down the engine if low engine oil pressure, low coolant level, or coolant over temperature conditions are experienced.

Commonality

The Caterpillar C7.1 engine is found in several Caterpillar products and applications such as Medium Wheel Loaders, Excavators, Motor Graders, Marine and Industrial services. This means the E15 shares component commonality across many applications, providing the highest level of reliability and durability, as well as superior parts availability worldwide through the Caterpillar Dealer Network.

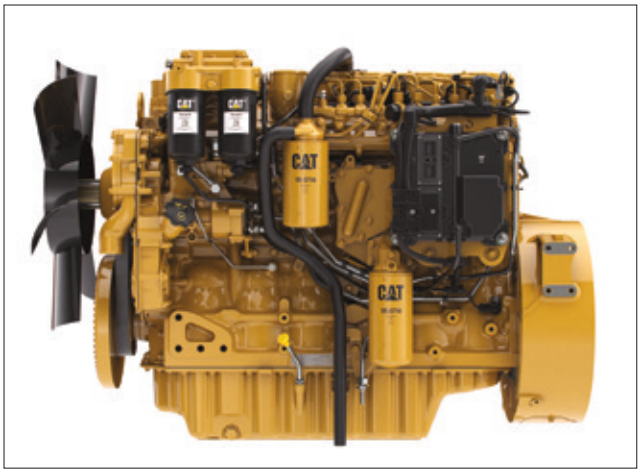

PERFORMANCE AND RELIABILITY IN TOUGH CONDITIONS.

Caterpillar five-speed transmission

The field proven Cat power shift countershaft transmission easily matches engine power to the load size and ground conditions. Gear changes are simplified with ergonomically positioned electronic fingertip controls, reducing operator fatigue.

High-capacity Electromagnetic retarder

Fitted to the rear frame, the electronically controlled retarder provides superior braking performance on grade, featuring diagnostic capabilities with alarm and fault conditions reported back to the operator display.

The integrated Retarder Control System (iRCS) combines both the control and power functions into a single unit. The innovative electronic design significantly reduces the retarder's energy consumption, preserving electric circuits. The retarder is controlled via an integrated multi-function joystick controller located on the operator's right-side armrest.

Reduced shifting

The multiplication capability of the torque converter reduces the need for the operator to continually shift the transmission. This reduces operator effort and improves machine productivity.

All wheel drive (AWD)

All-wheel drive provides excellent power distribution, increases traction of the machine reducing tire slippage, improving performance, handling and manoeuvrability in tough and challenging terrain.

Front and rear axles

The front axle features front suspension as a standard fitment. The rear axle is rigidly mounted to the rear frame.

Tyres

Tyres are an integral part in a machines ability to carry it's load at higher speeds. Fitted with the larger 16:00 R20 radial tires ensures the E15 stays within the tires TKPH limits.

This allows the E15 to carry larger loads at faster speeds than conventional utility equipment.

Service brakes

Hydraulically applied brake system. Brake components are oil immersed inside the axles, protecting them from contamination. Modulated braking provides smooth deceleration for precision stopping and operator control.

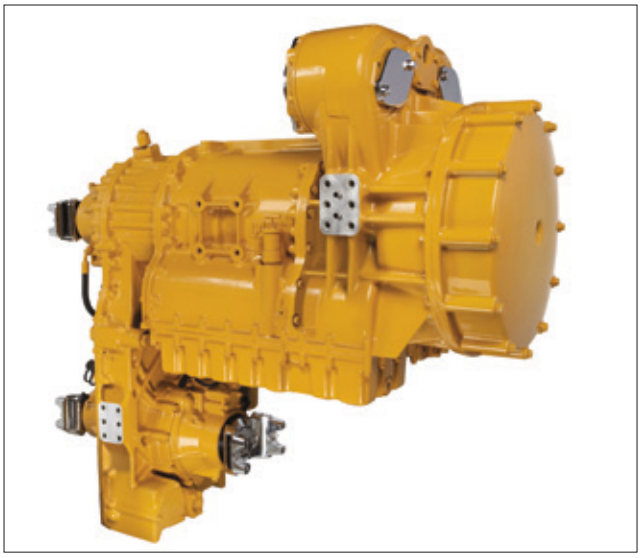

Parking brake

The parking brake is a spring applied oil released "fail to safe" enclosed wet disc on all 4-wheel ends.

Brake design

With large discs and plates for reliable, adjustment free operation and performance. Oil cooled disc brakes are completely enclosed to prevent contamination and reduce maintenance.

Emergency braking

When the E15 safety system detects loss of critical drive pressure or brake pressure the operator will receive a warning and then the parking brake system will be safely applied.

Load sensing

A load sensing variable displacement pump and pressure compensating system continually monitor hydraulic power requirements, then provides power based on demand. This improves fuel economy and reduces emissions.

Other features include suction circuits, pump case-drain and steering return, filtered fan/brake pressure circuit, and closed loop hydraulic system.

DELIVERING SHOTCRETE OR CONCRETE ON TIME WITH IMPROVED RIDE CAPABILITY.

● Standard ● Optional ● Safety

ROPS/FOPS CERTIFIED 3-SEAT ENCLOSED CABIN WITH AIR CONDITIONING
Superior operator comfort featuring ergonomic central driving position, air ride seats, air-cooled compartment, cupholders, and smartphone charging ports

RETARDER DIAL CONTROLLER
Located on the operator's arm rest

MACHINE RETRIEVAL POINTS 2x
Painted red

LED LIGHTING
All operation lighting

FILL CHUTE CAMERA MOUNT

FILTERED HYDRAULIC OIL TANK
Quick connect fill point RHS of machine (optional)

ENCLOSED BATTERY COMPARTMENT

EMERGENCY STOP

FIRE SUPRESSION SYSTEM
Mounted at ground level for access and includes nozzles mounted throughout the engine compartment

FIRE SUPPRESSION ACTUATION

WHEEL CHOCKS 2x

CENTRE MACHINE RETRIEVAL POINT
Painted red

MACHINE TIE DOWN POINTS

FRONT AND REAR HYDRAULIC JACK LEGS

HYDRAULIC FILLED NITROGEN-CHARGED FRONT SUSPENSION
A-frame suspension cradle with nitrogen-charged suspension cylinders

MACHINE ISOLATION
4 Pole isolators located at ground level adjacent to operators cabin

GROUND LEVEL ACCESS TO ALL FILTERS AND SERVICE POINTS
All filters and service points can be serviced from ground level

AUTO LUBRICATION PUMP
Automatically supplies grease to all lubricatiing points with ground level access RHS of machine

ARTICULATION LOCK

LARGE 7M³ AGITATOR BOWL (CUSTOM COLOURS AVAILABLE)
Includes two inspection hatches 180 degrees apart and lifting points on front and rear of bowl
AGITATOR BOWL CONTROL PANEL
Mounted on either side of machine at ground level and includes bowl control, E-stop and provision for optional components (Fire suppression actuator and slump meter)
TRUNNION ROLLER GUARDS
WATER AND CHEMICAL ADDITIVE DOSING
Hosing and pipework to pump water or chemicals into bowl from ground level
FEED CHUTE
CHUTE GUARD AND RETAINING STRAP
CHEMICAL TANK 245L
Located on RHS in chassis with pump delivery to shotcreter
BOWL MOTOR WITH VIBRATION ISOLATION MOUNTS
Maximum height 3240 mm
BOWL ROTATION LOCK
Painted red
WORK LIGHTS
ELPHINSTONE
SWIVEL CHUTE
Hydraulically raised and lowered
OSCILLATING HITCH
Provides superior operator comfort while maintaining constant ground contact
ONBOARD 180L WATER TANK
Stainless steel construction
3-PIECE WHEEL RIMS 16:00 R20 TYRES
FRONT AND REAR HYDRAULIC JACK LEGS
FORM OIL SYSTEM
Optional form oil system with wand to spray rear of machine
HIGH CAPACITY ELECTRO-MAGNETIC BRAKING RETARDER
Adjustable from the operator's seat, provides superior and reliable braking capability
BOWL GUARDS
Located on both sides of bowl
COMMON REAR FRAME FOR ALL APPLICATIONS
HIGH PRESSURE WASH DOWN WITH WAND
Optional for both sides of the machine
REAR MACHINE RETRIEVAL POINTS 2x
Painted red

SERVICEABILITY MEANS MORE TIME FOR PRODUCTION.

Ground-level serviceability

All service points are conveniently located at ground level for servicing. Downtime during maintenance is reduced markedly on the E15 due to clever engineering and design features, incorporated with service personnel in mind.

Quick change air filters and 500-hour oil service intervals reduce downtime and keep machines in operation longer. A centralised onboard service centre includes fast fill, evacuation, and fluid sample points for analysis.

Standard high-visibilty green steps and handrails enhance 3-point contact for safe and easy access to the cab, service platform and operation areas.

Machine Commonality

The Caterpillar C7.1 engine is common to both the E10 and E15 range of underground support vehicles.

The component commonality between the E10, E15 and many other Cat® applications, provides the highest level of reliability and durability, as well as superior parts availability worldwide through Elphinstone and the Cat® Dealer Network.

These factors and more contribute to a reduction in the total cost of operation (TCO), part stocking, and simplified maintenance and operation of the machine.

Bolt-on guards

Bolt-on guards offer protection to critical components and are easily removable for servicing. The bowl guards eliminate risk of entrapment with the rotating bowl and feature 2x inspection hatches on each side of the machine for inspection and cleaning purposes. All hot components are suitably covered or guarded.

Electrical system

The 24V electrical system delivers a reliable electrical capacity for engine starting and additional lighting. Wiring circuits are colour coded and numbered for easy diagnosis and repair. All circuits are protected by circuit breakers.

Wiring is double insulated with sealed electrical connectors to prevent moisture and dirt access. Harnesses are covered with fire resistant material for additional protection.

On-board diagnostic systems

The monitoring system continuously checks all critical machine functions and components and helps locate faults quickly for faster repair.

Hitch hoses

» The pilot hoses, pressure line and load sense lines have all been routed above the hitch and bulk-headed for easy hose replacement and fast service.
» Spin-on oil filters.
» Spin-on fuel and engine oil filters shorten downtime.
» Electronic transfer pump eliminates the need to manually prime the fuel system.

CUSTOMER SUPPORT

WHEN UPTIME REALLY COUNTS.

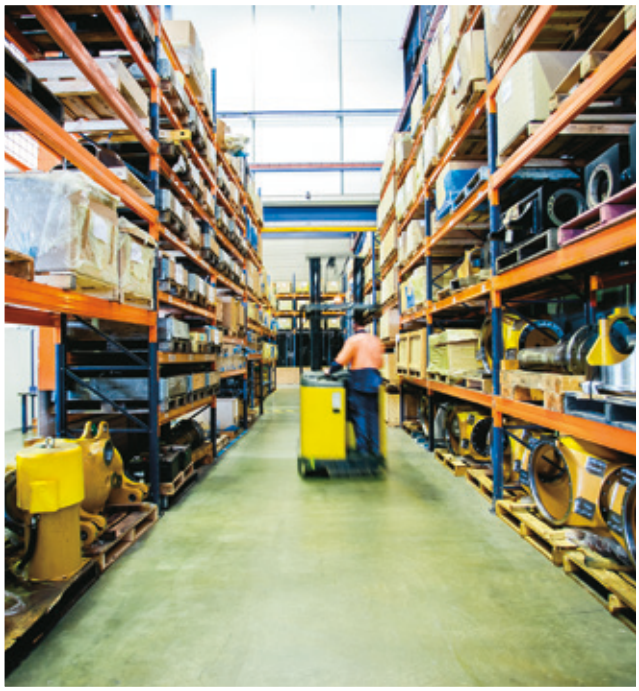

Renowned Cat dealer support

From helping you choose the right machine to financing and ongoing support, your Cat dealer provides the best in sales and service.

» Manage your costs with preventive maintenance programs like SOS™ fluids analysis, coolant sampling.
» Stay productive with best-in-class parts availability.
» Our Cat dealer can also help you boost efficiency with operator training.
» When it's time for component replacement, your Cat® dealer can help you save even more. Genuine Cat® remanufactured parts carry the same warranty and reliability as new products at savings of 40 to 70 percent for powertrain and hydraulic components.
» Technical training and maintenance planning are also part of the Dealer offerings.
» Would you like the dealer to do more? Programs such as Customer Service Agreements (CSA), to a full maintenance and repair contract are available.
» The E15 Agitator 7m³ contains >75% Genuine Cat® Parts.

FUTURE SUSTAINABILITY

THINKING INTO THE FUTURE.

Elphinstone machines are produced in Tasmania, Australia where our facilities operate on 100% renewable energy.

Sustainable waste and cost management

» Integrated machine systems and technologies improve productivity for greater accuracy, lower fuel use and reduce machine wear.
» Replaceable wear parts save maintenance time and cost and extend major component life.
» Ecology drains help make draining fluids more convenient and help prevent spills.
» Major components are built to be rebuilt, eliminating waste and saving customers money by giving the machine and/or major components a second – and even third life rebuilds.
» A variety of safety features help safeguard operators and others on the job.

Engine

Engine Tier	Tier 3 - Standard		Tier 4 Final (Optional)	
Engine Model	Cat C7.1 ACERT (TA)		Cat C7.1 ACERT (TA)	
Gross Power SAE J1995	168 kW	225 hp	151 kW	202 hp
Displacement	7.0131 L	428 in3	7.0131 L	428 in3
Bore	105 mm	4.1 in	105 mm	4.1 in
Stroke	135 mm	5.3 in	135 mm	5.3 in
Number of Cylinders	6		6	
Max Torque @ Rated Speed	1028 Nm @ 1400 rpm		870 Nm @ 1400 rpm	
Derating Altitude	3000 m	9843 ft	3000 m	9843 ft
Emission Certification	EPA Tier 3		EPA Tier 4 Final	
Alternator	150 amp		150 amp	
Electrical System	24 V		24 V	
Battery - Quantity	2		2	
Battery - Volts	12 V		12 V	
Battery - Capacity	1000CCA		1000CCA	
Starting System	Direct Electric		Direct Electric	

- Power ratings apply at 2200 rpm when tested under the specified standard conditions.
- Based on standard air conditions of 25' C (77' F) and 99 kPa (29.32 in Hg) dry barometer. Used 35' API gravity fuel having an LHV of 42,780 kJ/kg (18,390 BTU/lb) when used at 30° C (860 F) [ref. A fuel density of 838.9 g/L (7.001 lb/gal].

Powertrain

Travel Speed - Fwd. 1st	6.2 km/h	3.9 mph
Travel Speed - Fwd. 2nd	10.2 km/h	6.3 mph
Travel Speed - Fwd. 3rd	16.4 km/h	10.2 mph
Travel Speed - Fwd. 4th	21.9 km/h	13.6 mph
Travel Speed - Fwd. 5th	35.1 km/h	21.8 mph
Travel Speed - Rev. 1st	6.2 km/h	3.9 mph
Travel Speed - Rev. 2nd	10.2 km/h	6.3 mph
Travel Speed - Rev. 3rd	21.9 km/h	13.6 mph
Torque Converter Type	Lock-up clutch	
Transmission	5 fwd / 3 rev countershaft powershift	
Steering, Frame Articulation	42.5 degrees	
Brakes - Service Type	Hydraulic applied inboard WET disc enclosed	
Brakes - Parking Type	Internal Spring Applied Hydraulically Released wheel ends (SAHR)	
Tyres	16.00 R20	

Service Refill

Fuel Tank	340 L	89.8 gal
Cooling System	50 L	13.2 gal
Differential, Final Drive - F	18.5 L	4.9 gal
Differential, Final Drive - R	20.5 L	5.4 gal
Engine Oil	13.5 L	3.6 gal
Transmission, Torque Converter	31 L	8.2 gal
Hydraulic Tank	150 L	39.6 gal
Bowl Geared Head	8 L	2.1 gal
Diesel Exhaust Fluid (DEF) (Tier 4 Final Only)	16 L	4.2 gal

Tank Capacities

Form Oil (optional)	2x95 L	2x25 gal
Water (optional)	180 L	47.6 gal
Chemical (optional)	245 L	64.7 gal

Speed on Grade

Cat C7.1 ACERT, 168kW Tier 3					
Grade	Vehicle Speed (km/h)				
	1st Fwd	2nd Fwd	3rd Fwd	4th Fwd	5th Fwd
1:7 (14%) Empty (20,190 kg)	6.2	10.2	16.4	15.9	-
1:7 (14%) GVM (35,860 kg)	6.2	9.7	-	-	-

Cat C7.1 ACERT, 151kW Tier 4 Final (High Power)					
Grade	Vehicle Speed (km/h)				
	1st Fwd	2nd Fwd	3rd Fwd	4th Fwd	5th Fwd
1:7 (14%) Empty (20,190 kg)	6.2	10.2	14.9	-	-
1:7 (14%) GVM (35,860 kg)	6.2	8.4	-	-	-

*Note: 2% rolling resistance

Agitator

Drum Volume	
100% Drum Volume	10.9m³
Rated Capacity to AS 1792-1991 (65%)	7.1m³
Retained Capacity / Nominal	7m³

Bowl Capacities						
Material SG kg/m³	2000	2100	2200	2300	2400	2500
Maximum Fill Capacity m³	8.4	8.0	7.6	7.3	7.0	6.7

Weights

Gross Vehicle Weight (GVM)	35,860 kg	79057.8 lb
Tare Weight	20,190 kg	44511.3 lb

*Tare weight includes one operator and a full tank of fuel.

Standards

ROPS/FOPS	ISO 3471:2008 / ISO 3449:2005
Steering	ISO 5010:2007
Braking	ISO 3450-2011/CSA-M424.3-M90

MACHINE DIMENSIONS

Turning Radius

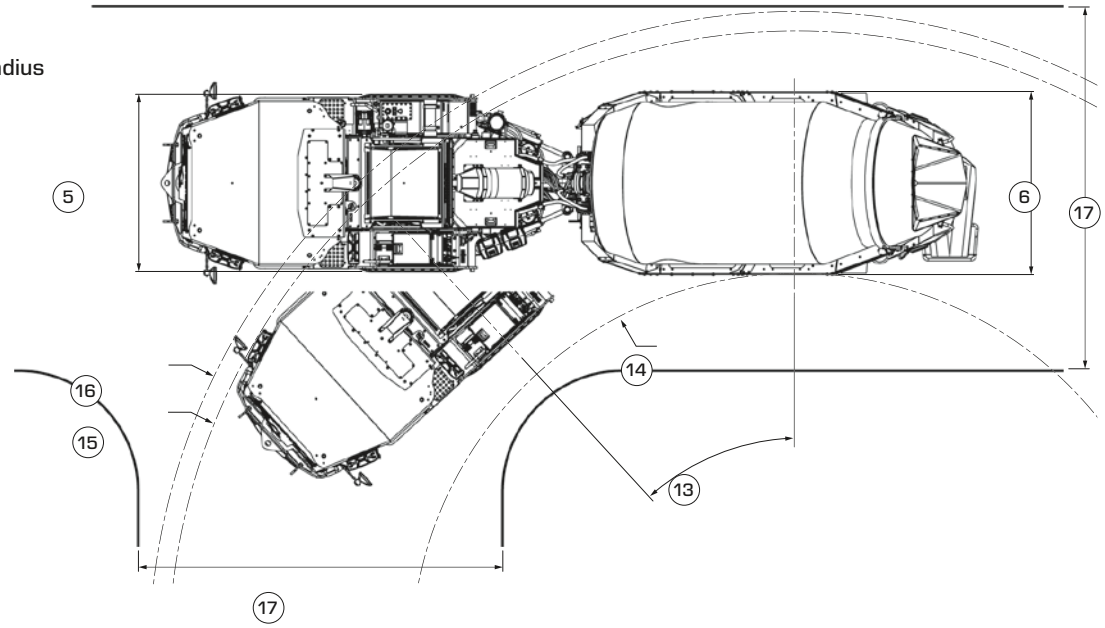

Side View and Drive Size

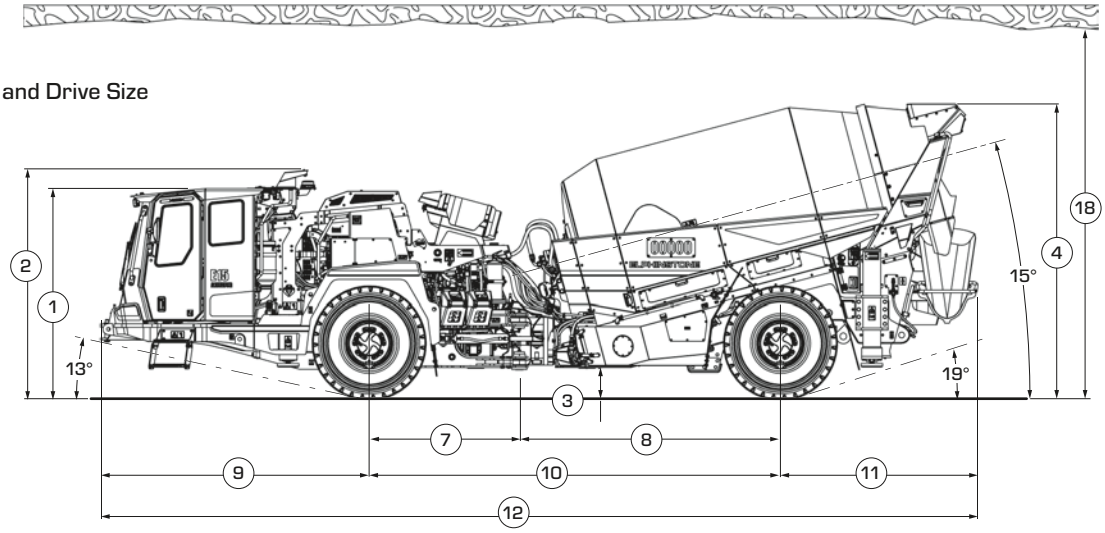

Dimensions

1	Height - Top of Cabin	2410 mm	7 ft 10.8 in
2	Height - Top of Chute Camera Mount	2595 mm	8 ft 6.2 in
3	Height - Ground Clearance	335 mm	1 ft 1.2 in
4	Height - Top of Feed Chute	3355 mm	11 ft 0.9 in
5	Width - Machine Front Frame	2180 mm	7 ft 1.8 in
6	Width - Machine Rear Frame	2315 mm	7 ft 7.1 in
7	Length - Front Axle to Hitch	1725 mm	5 ft 7.9 in
8	Length - Hitch to Rear Axle	3000 mm	9 ft 10.1 in
9	Length - Front axle to bumper	3090 mm	10 ft 1.8 in
10	Length - Wheel Base	4725 mm	15 ft 6.0 in
11	Length - Rear Axle to Chute	2515 mm	8 ft 3.0 in
12	Length - Overall	10330 mm	33 ft 10.7 in
13	Articulation	42.5 deg	

Drive Size

14	Radius - Inside Clearance	4700 mm	15 ft 4.1 in
15	Radius - Outside Clearance	7695 mm	25 ft 0.5 in
16	Radius - Outside Clearance	7950 mm	26 ft 0.9 in
17	Minimum Width Portal (90° corner)	4500 mm	14 ft 9.1 in
18	Typical Minimum Height Portal	4500 mm	14 ft 9.1 in

STANDARD AND OPTIONAL EQUIPMENT

● Standard ● Optional ● Safety

Powertrain

Air Cleaner, 2-Stage With Integral Pre-Cleaner	●
All Wheel Drive with Lock-up Torque Converter	●
Axle Breathers, Remote Mounted	●
Brakes - Parking, Four Wheel Spring Applied, Enclosed Disc	●
Brakes - Service, Four-Wheel Pressure Applied Enclosed Disc	●
Brake - Driveline, Electromagnetic Retarder	●
Driveline Slip-joint, Lubed for Life	●
Engine, Cat C7.1, ACERT Technology, ATAAC - Tier 3	●
Engine, Cat C7.1, ACERT Technology, ATAAC - Tier 4 Final	●
Fan, Sucker	●
Filters, Engine Air, Primary/Secondary	●
Filters, Fuel, Primary/Secondary	●
Final Drives, Outboard Planetary	●
Fuel Transfer Pump (Electric)	●
Fuel Lines - Double Wire Braided	●
Fuel Shutoff Valves Supply & Return	●
Lock - Wheel Nut (Torque Retention)	●
Muffler/Catalytic Converter (Tier 3 Only)	●
Oscillating Hitch	●
Radiator	●
Steering, Rotary Metering Pump	●
Suspension, Front Axle	●
Transmission, Countershaft Powershift (5F/3R)	●
Universal Joints, Lubed for Life	●
Fast-Fill Systems	
Coolant, Engine Oil, Hydraulic Oil, Transmission Oil	●
Fuel, Non-pressurised	●

Antifreeze

Coolant, Extended Life for -35˚C (-30˚F)	●
Coolant, Arctic Extended Life for -50˚C (-58˚F)	●

Operator Environment

300 mm (12 in) Touch Screen Operator Display	●
Air-cooled Compartment (for Lunchbox Storage)	●
Brake Retarder Control	●
Cabin, Enclosed, FOPS/ROPS, HVAC System	●
Cabin, Pressuriser	●
RESPA Recirculation Filter	●
Camera/Monitor, Reversing	●●
Cupholders	●
Diagnostic Connector	●
Engine Idle Timer	●
Fire Extinguisher 1.5 kg, Hand Held Dry Chemical Powder 3A:40B:E LH and RH Side	●●
Interior Lamps (LED)	●
Mirrors, Rear View	●
Seat Belt, 3x Retractable, Occupancy Indicator	●
Seat, T-Seat, Air Suspension, Operator	●
2x Seat, T-Seat, Air Suspension, Companion	●
Seat Covers, Operator and Companion	●
Steering Wheel, Tilt and Telescoping	●
Device Charging Ports	●
Instrumentation, Gauges	
Brake, Accumulator Pressure	●
Brake, Oil Pressure	●

Operator Environment

Diesel Exhaust Fluid (DEF) (Tier 4 Final Only)	●
Engine, Coolant Temperature	●
Engine, Oil Pressure	●
Fuel, Level	●
Hydraulic, Oil Temperature	●
Pressuriser Air Filter, High Efficiency Particulate Air	●
Pressuriser Air Filter, Activated Charcoal	●
Speedometer	●
Steering, System Pressure	●
Tachometer	●
Torque Converter, Oil Temperature	●
Instrumentation, Warning Indicators	
Brake, Accumulator Oil Pressure	●
Brake, Fault	●
Brake, Park Indicator	●
Cabin, Door Open	●
Electrical System	●
Emergency Stop	●
Engine, Coolant Temperature	●
Engine, Fault	●
Engine, Oil Pressure	●
Hydraulic, Oil Level	●
Hydraulic, Oil Temperature	●
Steering, Primary	●
Steering, Secondary	●
Torque Converter, Oil Temperature	●
Transmission, Fault	●
Transmission, Oil Filter Bypass	●
Instrumentation, Digital Data	
Gear and Direction	●
Driveline Retarder, Braking Percentage	●
Service Hour, Meter	●

Electrical

Accessory Power Port (12 V) & (24 V)	●
Alarm, Back-up	●
Alternator, 150 amp	●
Auxiliary Start Receptacle	●
Batteries, Maintenance Free (2x1000 CCA)	●
Battery Isolation, Lockable Disconnect Switch (4 Pole)	●
Emergency Stop - Cabin	●●
Emergency Stop, LH Side Front	●●
Emergency Stop, RH Side Front	●●
Horn, Warning	●
Lights, Beacon (LED), Cab Mounted (Amber/Red/Blue)	●●
Lights, Beacon (LED), (Amber Rotating)	●●
Lights, Headlights (LED)	●
Lights, Reversing	●
Lights, Stop/Tail/Turn (LED)	●
Lights, Work, Front/Rear - Cab Mounted (LED)	●
Lights, Work, Front/Rear - Cab Mounted (LED) Additional	●
Radio, Ready, Communications	●
Radio, AM/FM/USB/Bluetooth	●
Sealed Electrical Connectors	●
Starter, Electric, Heavy Duty	●
Starter Isolator, Lockable Disconnect Switch (4 Pole)	●

STANDARD AND OPTIONAL EQUIPMENT

● Standard ● Optional ● Safety

Electrical

Starting and Charging System, 24 V	●

Hydraulics

Case Drain Return Screen	●
Closed Center-load Sensing System	●
Hydraulic Oil Cooler	●
Hydraulic Oil Filling System, Filtered	●
Line Filter, Full Flow Return	●
Suction Screen	●

Agitator and Work Tools

Bowl, Auxiliary Motor Quick Connection Fittings	●
Bowl, Controls, Cabin	●
Bowl, Controls, Fixed, Rear	●
Bowl, Guards, with Access Covers	●●
Bowl, Lifting Hardware	●
Bowl, Lock	●●
Camera, Rear, Discharge Chute, Mounted	●
Chute Extensions, Base/Extension/Placement	●
Emergency Stop, Ground Level, RH Side Rear	●●
Jack Legs, Hydraulic, Front (LH and RH Side)	●
Jack Legs, Hydraulic, Rear (LH and RH Side)	●
Lights, Work, Rear (LED) 6x	●
Water Pump, High Pressure, Hose, Reel, and Lance	●
Water Pump, Low Pressure, Hose, Reel	●
Tank, Chemical Additive	●
Tank, Form Oil	●
Tank, Water	●
Slump Meter Gauge, Rear	●
Operator Display	
Bowl, Speed (RPM)	●

Agitator and Work Tools

Current Mode of Operation - Plant Mix, Transit Mix, Discharge	●
Slump Meter, Cab	●

Other

Brakes, Park, Onboard, Release for Machine Retrieval	●●
Film, GP Reflective, Flourescent Yellow	●●
Fire Extinguisher, 4.5 kg, Hand Held Dry Chemical Powder 4A:60B:E LH and RH Side	●●
Fire Extinguisher, 9 kg, Hand Held Dry Chemical Powder 6A:80B:E LH and RH Side	●●
Fire Suppression System, Ansul A101 Dry Chemical Powder, Engine Shutdown	●●
Fire Suppression System, Sandvik Aqueous-Film Forming Foam, Engine Shutdown	●●
Grease Lubrication System, Centralised, Manual	●
Grease Lubrication System, Automatic	●
Lift, Tie Down and Retrieval Points (Front and Rear)	●
Mudguards	●
Radiator, Cap, Manual Pressure Release	●
Scheduled Oil Sampling (SOS) ports	●
Steering, Frame Lock Link	●
Steering, Secondary	●
Tyres, Tubeless Rims (16.00 R20)	●
Tyre and Rim, Spare (16.00 R20)	●
Unit Number Placard	●
Wheel Chocks	●●

YOUR NOTES

YOUR NOTES

OVER 50 YEARS IN THE MINING INDUSTRY.

Elphinstone Pty Ltd is an established Caterpillar OEM Solutions customer with over 50 years' experience in the mining industry.

Elphinstone specialises in the design, manufacture and support of quality equipment for the global underground and surface mining industries.

The Elphinstone range of products combines practical design, the latest technology and quality manufacturing to ensure reliable performance.

The current product range includes specialised underground support vehicles, mine extraction devices, extended distance off-highway haulage trucks and water tanks designed to fit Caterpillar 740C, 745C and 745 articulated trucks.

All Elphinstone products, technical assistance, support, and access to spare parts are available through the global Cat® dealer network with additional support from the Elphinstone regional sales and support team.

E15 AGITATOR 7M³

For more complete information on Elphinstone products, dealer services, and industry solutions, visit www.elphinstone.com or contact your local Cat® dealer.

Material and specifications are subject to change without notice. Featured machines in photos may include additional equipment.

Elphinstone and their respective logos, as well as corporate and product identity used herein, are trademarks of Elphinstone and may not be used without permission.

© 2026 Elphinstone. All rights reserved.
Made in Australia for export.

ELPHINSTONE

HM61780-04 (10-2026)