ELPHINSTONE

WR820
Underground Agitator Truck

Engine

Engine Model Cat C11 ACERT™	
Gross Power - SAE J1995	242 kW / 325 hp
Net Power - SAE J1349	237 kW / 317 hp

Drum Volume

Carrying Capacity	100% fill
6.0 m^3 / 7.8 yd^3	8.8 m^3 / 11.5 yd^3
8.0 m^3 / 10.5 yd^3	10.5 m^3 / 13.7 yd^3

Contents

Power Train 2

Operator Station 3

Work Tools 4

Safety 5

Serviceability 6

Specifications 7

Standard Equipment 10

Optional Equipment 11

Engine

The Cat engine delivers power, performance and durability.

C11 Engine. The Cat C11 uses Caterpillar's breakthrough ACERT™ Technology to meet exhaust emission reduction standards. It features efficient fuel delivery, air management and electronic control for high productivity and exceptional service life.

Engine Design. The four-stroke engine provides efficient fuel combustion. Precise engineering and thorough testing assure durability, reliability and power. Built-in serviceability and excellent fuel economy lower operating costs.

ACERT™ Technology. Caterpillar optimizes engine performance while meeting EPA Tier 3 regulations. ACERT™ Technology reduces emissions during the combustion process by using advanced technology in the air and fuel systems, in conjunction with integrated electronics. The Caterpillar engine meets emission regulations at the combustion source rather than recycling exhaust gases.

ADEM A4 Control Module. This module controls the fuel injector solenoids to monitor fuel injection. This system provides automatic altitude compensation.

Turbocharger. The C11 engine features a waste gate turbocharger that provides high boost over a wider range, improving engine response and peak torque, as well as providing low-end performance.

Proven Fuel Injectors. The Cat C11 has a proven high-pressure, direct injection fuel system. This system electronically monitors operator demands and sensors optimize engine performance.

Maintenance. The machine is equipped with Caterpillar high efficiency oil filters, whose design doubles efficiency without increasing the change interval. They provide clean oil to the engine, reducing wear on all lubricated surfaces.

Commonality. The Caterpillar C11 engine is used in Cat products such as the 966H medium wheel loader, R1700G LHD and the 730 articulated truck. This engine commonality ensures the highest level of reliability and durability as well as superior parts availability worldwide.

Power Train

The integrated Cat power train delivers performance and reliability in tough conditions.

Six-Speed Transmission. The field proven Cat power shift transmission easily matches engine power to the load size and ground conditions.

Gear Application. Gear ratios are designed to maximize productivity in specific cycle segments:

- Gear 1 provides highest rimpull capability for heavy load applications
- Gears 2, 3 for normal loads and higher speed operations
- Gear 4, 5 provide excellent empty return and roading speeds

Torque Converter. The large, heavy-duty torque converter maximizes the productivity of the entire drive train. The torque converter is matched to the Cat C11 engine for excellent rimpull and performance.

Lock-up Clutch. The integral lock-up clutch allows the machine to operate in converter drive for greater rimpull, or direct drive for high efficiency hauling and faster travel speeds. Direct drive capability allows up to 15% higher travel speeds when the lock-up clutch is engaged.

Auto Lock-up. The lock-up clutch automatically engages according to ground speed and engine speed conditions. This feature is handled electronically and allows for increased travel speeds in the same gear.

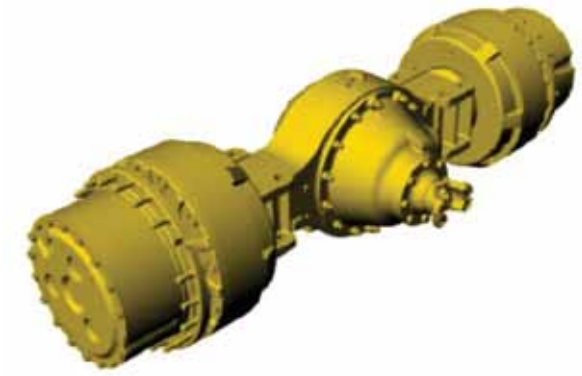

Reduced Shifting. Torque multiplication capability of the torque converter reduces the need for the operator to continually shift the transmission. This reduces operator effort and improves machine productivity.

Oscillating Front Axle. The front axle features a oscillating pinionmounted design to ensure four wheel ground contact for maximum traction and stability.

Fixed Rear Axle. The rear axle is rigidly mounted to the rear frame.

Integrated Braking System. The oil cooled braking system delivers reliable performance and control in the most extreme underground mining conditions. The integrated system combines the service, secondary, parking brake and retarding functions in the same robust system for optimum braking efficiency.

Oil Cooled Multiple Disc Brakes. Four wheel, forced oil cooled, multiple disc service brakes are continuously cooled by a water to oil heat exchangers for exceptional, non fade braking and retarding performance.

Brake Design. With large discs and plates for reliable, adjustment free operation and performance. Oil cooled disc brakes are completely enclosed to prevent contamination and reduce maintenance.

Parking Brake. The parking brake is a spring applied oil released “fail to safe” enclosed wet disc wheel end brake.

Splash Lubricated. All axle components are splash lubricated.

Heat Rejection. Oil capacity provides excellent heat rejection, ensuring proper lubrication of all axle components.

Operator Station

Easy to operate controls result in less fatigue.

Comfortable Work Station. An open operators station is standard. It combines safety, comfort and ease of machine operation. The work station includes the following features:

- ROPS/FOPS
- Suspension seat
- Safety belt
- Resilient mounting
- Enclosed operator station available as an option

Transmission Controls. The transmission control for forward, reverse and gear range is conveniently located for the operator's right hand. The operator can control machine functions with minimal effort, allowing greater concentration on vehicle operation and reduced operator fatigue.

Engine Protection System. An engine protection system is fitted that will shut down the engine if low engine oil pressure, low coolant level, or coolant over temperature conditions are experienced.

Additional. The cab is pre-wired for a 2-way radio (12V).

Cab Mounting. The modular ROPS/FOPS cabin is resiliently mounted on the truck chassis, reducing vibration for greater comfort and a quieter ride.

Monitoring Controls. Conveniently located and easy-to see gauges and displays make monitoring machine systems as simple as possible.

Monitoring System. Continuously provides critical machine data. A three-level warning system alerts the operator of any abnormal machine health conditions.

Gauges. Provide a constant display of vital machine functions, including engine coolant temperature, transmission oil temperature, engine oil pressure, engine speed, vehicle speed and fuel level.

Steering Column. Tilts and is telescopic for comfortable operation.

Work Tools

Load Sensing Hydraulics. A load sensing variable displacement pump and pressure compensating system continually monitor hydraulic power requirements, then provides power based on demand.

Water Tank. 220 litre water tank with optional flowmeter.

Chemical Dosing Tanks. Optional chemical dosing tanks equipped with flowmeter.

Mixer. Hydraulically controlled mixing and unloading:

- Manual bowl controls including
- Optional remote engine throttle
- Quick disconnect hydraulic fittings
- Slump meter
- Optional remote bowl control system
- Bolt on external access covers

Safety

Mining machines that are designed with safety as the first priorit .

Product Safety. The WR820 Underground Agitator Truck is designed with safety as an integral part of all machine and systems design.

Centralised Machine Isolation. The single access point provides easy access to all engine machine isolation functions:

- Engine disconnect switch
- Starter isolation switch
- Jump start receptacle
- Fire system activation (if equipped)

Protective Structure. The operator station has integrated into its construction a ROPS/ FOPS (Roll-Over Protective Structure), ISO 3471:2008, (Falling Object Protective Structure) ISO 3449:2005) that offers protection to the operator.

Handrails. Handrails are fitted standard in accordance with ISO 2867:2011.

Steering. Full hydraulic control. Meets ISO 5010:2007 standard.

Braking. Full hydraulic control. Meets ISO 3450:2011 standard.

Additional Safety Features:

- Anti-skid deck surfaces
- 3 point access to cab and machine
- Two doors either side of machine to access operator station
- Suspension seat
- Inertia reel retractable seat belt
- Steering frame lock
- Hinged belly guards
- Triple insulated battery cables
- Electrical wiring run independent of all hosing
- Fuel water separators, non-flammable
- Firewall / heatshields
- Handrails
- Machine interlocks
- Centralised isolation point
- Integrated fire suppression systems (optional)

Service Access. Easy access to daily service points simplifies servicing and time spent on regular maintenance procedures.

Ground Level Access. Allows convenient servicing to tanks, filters, lubrication points and compartment drains.

Interlock. If the operator fails to apply the park brake prior to exiting the cab, the interlock system will detect the absence of operator input and apply the park brake, neutralise the steering, implements and transmission.

Serviceability

Increased productivity through ease of service.

Frame Access. Steps and grab handles are standard on the engine end frame and cab for easy access to the service and operation areas.

Bolt-on Guards. Bolt-on belly guards offer protection to critical components, are hinged and easily removable for servicing.

Air Filters. Radial seal air filters makes them easy to change, reducing air filter maintenance times.

Diagnostics. Electronic control system enables quick diagnosis of engine/transmission conditions and effective maintenance and repairs ilters and lubrication points are accessible from the ground without special tools. Remote lubrication points make daily attention to hard-to-reach joints easy.

Pressure Taps. Conveniently located for easy access to hydraulic system pressure measurements.

Spin-on Oil Filters. Spin-on fuel and engine oil filters shorten downtime.

Ecology Drains. All major fluid compartments (hydraulic tank, engine oil pan, radiator, axles and transmission) incorporate ecology drains to make regular maintenance easier, and protect the environment from accidental oil spills.

Centralised Service Centre that includes fast fill and evacuation points, fluid sampling points and a battery isolation point is available as an option.

Electrical System. The 24V electrical system delivers dependable electrical power for engine cranking, additional lighting, and engine diagnostics. Wiring circuits are color coded, numbered for easy diagnosis and repair All circuits are protected by circuit breakers. Wiring is double insulated with sealed electrical connectors to prevent moisture and dirt access. Harnesses are covered with fire resistant material for additional protection.

Battery cables are triple insulated for extra protection against rubbing.

On-Board Diagnostic Systems. The monitoring system continuously checks all critical machine functions and components, and helps locate faults quickly for faster repair. Extremes are recorded, including fluid temperatures, engine speed and electrical system events.

Specification

Engine

Engine Model		Cat C11 ACERT™
Gross Power SAE J1995	242 kW	325 hp
Net Power ISO9249	239 kW	321 hp
Net Power SAE J1349	237 kW	317 hp
Displacement	11.15 L	680 in^3
Bore	130 mm	5.1 in
Stroke	140 mm	5.5 in
Number of Cylinders		6
Max Torque @ Rated Speed	1430 Nm @ 1300rpm	
Derating Altitude	3048 m	9843 ft

- These ratings apply at 1,800 rpm when tested under the specified standard conditions
- Net power advertised is the power available at the flywheel when the engine is equipped with fan, air cleaner, muffler and alternator. No Derating required up to 3,000 m (9,843 ft) altitude
- Based on standard air conditions of 25' C (77' F) and 99 kPa (29.32 in Hg) dry barometer. Used 35' API gravity fuel having an LHV of 42,780 kJ/kg (18,390 BTU/lb) when used at 30° C (860 F) [ref. A fuel density of 838.9 g/L (7.001 lb/gal4]

Electrical System

Alternator	100 amp
Electrical System	24v
Battery - Quantity	2
Battery - Volts	12v
Battery - Capacity	950CCA
Starting System	Direct Electric

Power Train

Travel Speed - Fwd. 1st	5.3 km/h	3.3 mph
Travel Speed - Fwd. 2nd	10 km/h	6.3 mph
Travel Speed - Fwd. 3rd	15.2 km/h	9.5 mph
Travel Speed - Fwd. 4th	23.3km/h	14.6 mph
Travel Speed - Fwd. 5th	32.4 km/h	20.3 mph
Travel Speed - Fwd. 6th	38.3 km/h	23.9 mph
Travel Speed - Rev. 1st	5.9 km/h	3.7 mph
Transmission	6 fwd / 1 rev powershift	
Transmission Cooler Type	Tube and Bund	
Travel speed on 1:7 grade calculated	8.0 km/hr	5.0 mph
Steering, Frame Articulation	+/- 45 degrees	
Brakes - Service Type	Multiple WET disc enclosed	
Brakes - Parking Type	Spring applied wheel ends	
Tyres	18.00 R25	

Hydraulic System

Circuit Type	Closed centre variable flow	
Pump type	Axial piston	
Pump Output	174 L/min	46 gal/min
Relief Valve Setting	21,000 kPa	3045 psi
Steering valve	Direct link, non follow	
Steering Cylinder - Bore	88.9 mm	3.5 in
Steering Cylinder - Stroke	437.5 mm	17.22 in
Steering Cylinder - Rod Dia	50.8 mm	2 in

Service Refil

Fuel Tank	361 L	94 gal
Cooling System	67 L	18 gal
Differential, Final Drive - F	55 L	14.5 gal
Differential, Final Drive - R	55 L	14.5 gal
Engine Oil 41 L 11 gal		
Transmission, Torque Converter	36 L	9.5 gal
Hydraulic Tank	151 L	49 gal

Specifications

6.0m³ capacity.

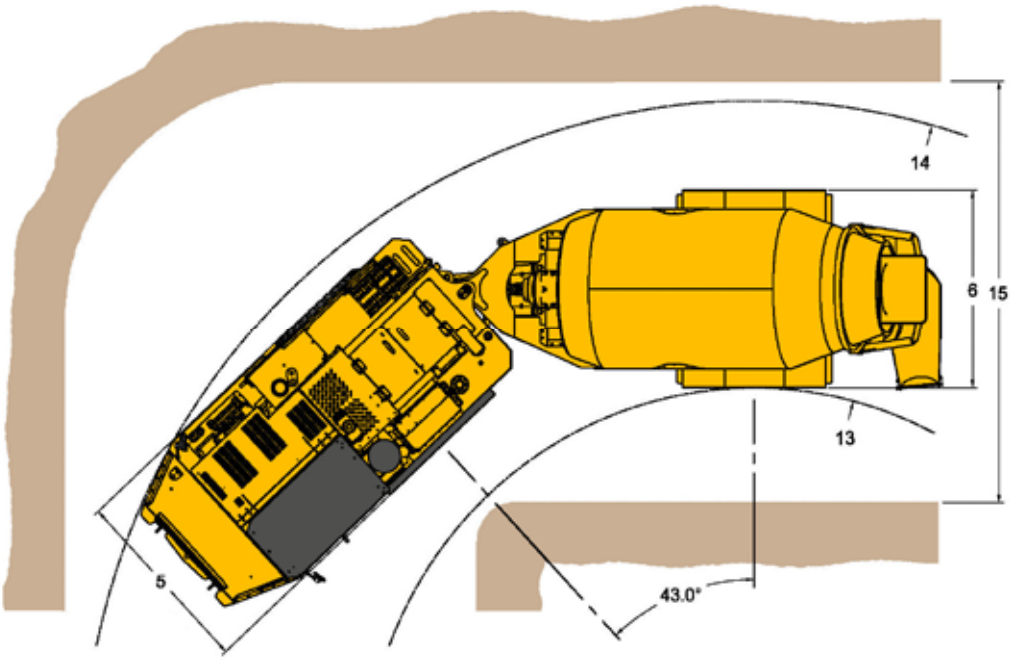

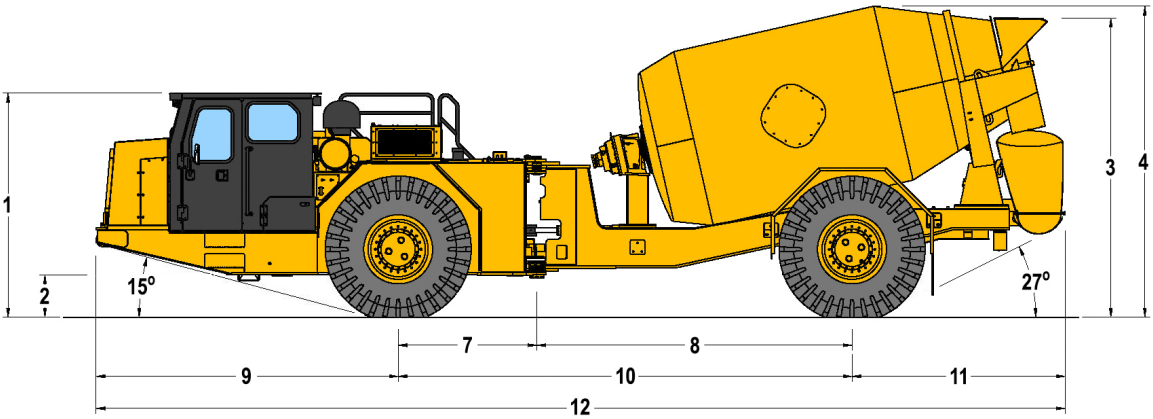

Dimensions

1	Height-Top of Cabin	2,530 mm	99.6 in
2	Height-Ground Clearance	466 mm	18.3 in
3	Height-Top of Feed Chute	3,354 mm	132.0 in
4	Height-Top of Agitator	3,490 mm	137.4 in
5	Width-Machine Front Frame	2,345 mm	92.3 in
6	Width-Machine Rear Frame	2,345 mm	92.3 in
7	Length-Front Axle to Hitch	1,558 mm	61.3 in
8	Length-Hitch to Rear Axle	3,639 mm	143.3 in
9	Length-Front Axle to Bumper	3,392 mm	133.5 in
10	Length-Wheel Base	5,097 mm	200.6 in
11	Length-Rear Axle to Chute	2,393 mm	94.2 in
12	Length-Overall	10,882 mm	428.4 in

Turning Dimensions

13	Radius-Inside Clearance	4,785 mm	188.4 in
14	Radius-Outside Clearance	7,615 mm	299.8 in
15	Width-Drive Clearance	4,500 mm	177.2 in
	Articulation Angle	43°	
	Tare Mass	23,560 kg	51941 lb
	Gross Vehicle Mass	38,760 kg	85451 lb

Specification

8.0m³ capacity.

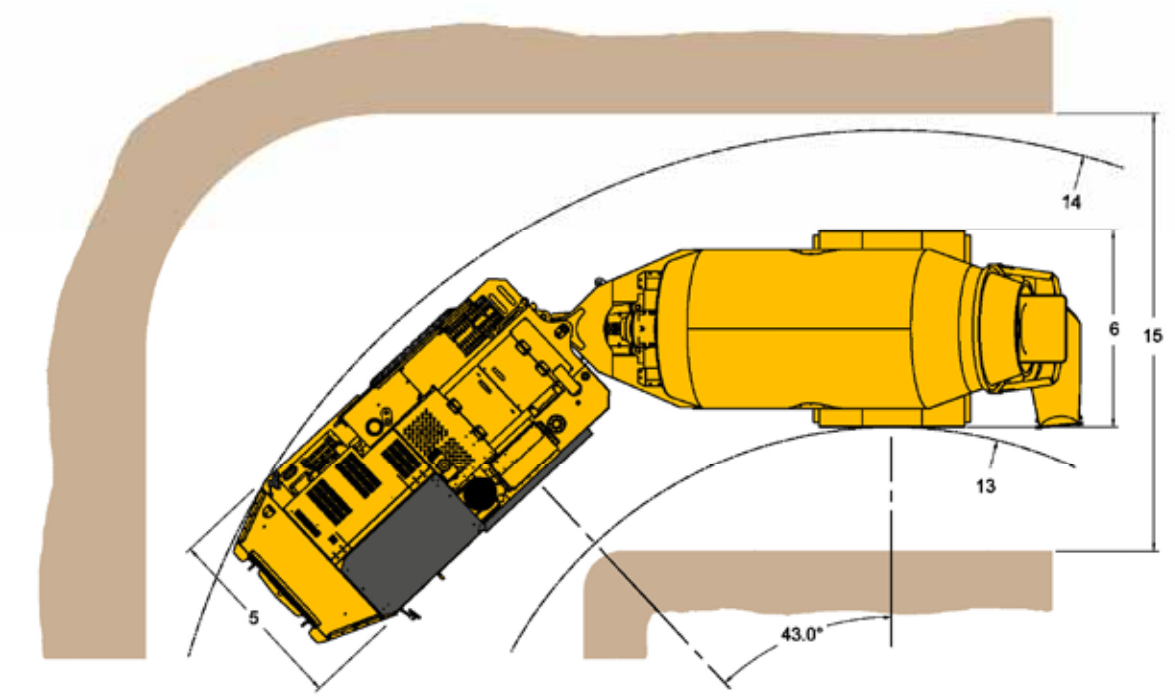

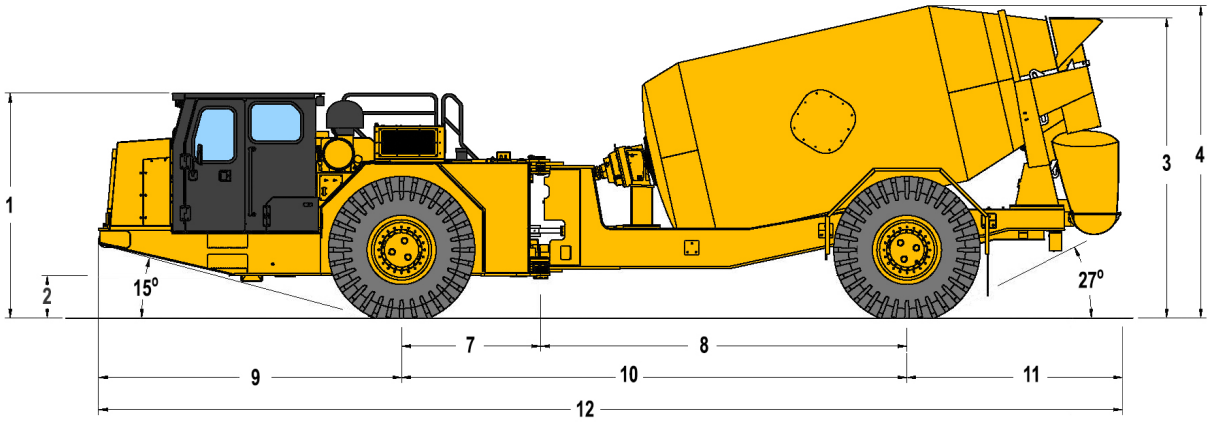

Dimensions

1	Height-Top of Cabin	2,530 mm	99.6 in
2	Height-Ground Clearance	466 mm	18.3 in
3	Height-Top of Feed Chute	3,354 mm	132.0 in
4	Height-Top of Agitator	3,490 mm	137.4 in
5	Width-Machine Front Frame	2,345 mm	92.3 in
6	Width-Machine Rear Frame	2,345 mm	92.3 in
7	Length-Front Axle to Hitch	1,558 mm	61.3 in
8	Length-Hitch to Rear Axle	4,100 mm	161.4 in
9	Length-Front Axle to Bumper	3,392 mm	133.5 in
10	Length-Wheel Base	5,658 mm	222.8 in
11	Length-Rear Axle to Chute	2,393 mm	94.2 in
12	Length-Overall	11,443 mm	450.5 in

Turning Dimensions

13	Radius-Inside Clearance	4,785 mm	188.4 in
14	Radius-Outside Clearance	7,615 mm	299.8 in
15	Width-Drive Clearance	4,500 mm	177.2 in
	Articulation Angle	43°	

Tare Mass	23,560 kg	51941 lb
Gross Vehicle Mass	43,560 kg	96034 lb

Machine Equipment

Standard equipment.

ELECTRICAL
Accessory power port (12V)
Alarm, back-up
Alternator, 100 amp
Anti-corrosion protection spray
Batteries, maintenance free (2 - 1000 CCA)
Battery isolation lockable disconnect switch (2 post)
Brake and tail lights
Electronic monitoring system
Diagnostic connector
Emergency stop switch (ground level)
Headlights with dip switch
Horn, warning
Rear work light (cab mounted)
Reversing lights
Starting and charging system, 24V
Starter, electric, heavy duty
Starter isolator lockable
Sealed electrical connectors

OPERATOR ENVIRONMENT
Computerised monitoring system
- Instrumentation, gauges:
  - Engine coolant temperature
  - Fuel level
  - Hydraulic oil temperature
  - Tachometer
  - Torque converter oil temperature
- Instrumentation, warning indicators:
  - Brake oil pressure
  - Engine oil pressure
  - Lockup clutch
  - Parking brake application
  - Primary steering pressure
  - Secondary steering pressure (if equipped)
  - System voltage
  - Transmission filter bypass
  - Work lights
- Instrumentation, digital data:
  - Computerised diagnostics and monitoring
  - Engine rpm
  - Gear and direction
  - Odometer
  - Service hour meter

Dome light
Manual brake retarder control
Mirrors, rear view
Open operator station, FOPS/ROPS:
- Seat, suspension with retractable seat belt
- Steering wheel, tilt and telescoping

POWER TRAIN
Air cleaner, 2-stage with pre-cleaner
Brakes:
- Parking, four wheel spring applied, enclosed disc
- Service, four-wheel pressure applied enclosed disc

Driveline slip-joint, lubricated for life
Engine, Cat C11, ACERT Technology, ATAAC
Engine overspeed inhibitor
Fan, sucker
Filters, fuel/engine air, primary/secondary
Final drives, inboard planetary
Fuel transfer pump (mechanical)
Fuel tank, high capacity
Lock-up torque converter
Long-life coolant (-50˚C protection)
Muffler/catalytic converter
Oscillating front axle
Radiator
Steering, rotary metering pump
Transmission, power-shift (6F/1R) with auto-shift function
Universal joints, lubricated for life

HYDRAULICS
Closed centre - load sensing system
Hydraulic oil cooler
Line filter, full flow return

OTHER STANDARD EQUIPMENT
Articulation lock link
Ecology drains (engine, hyd tank, axles, transmission)
Engine enclosures, hinged
Firewall
Guards, hinged - under engine and transmission
Manual pressure release radiator cap
Mudguards
Semi centralised manual lubrication system
SOS℠ Oil sampling ports
Tie down points and tow-pins (front and rear)
Tyres and tubeless rims (18.00R25)

Machine Equipment

Optional equipment.

ELECTRICAL
Alternator, high output
Auxiliary start receptacle
Emergency stop switch:
- Cabin
- Ground level – rear

Jump start receptacle
Turn indicators

OPERATOR ENVIRONMENT
Automatic brake retarder control
Brake system oil pressure gauges
Camera/monitor, reversing
Dual speed control
Enclosed air conditioned cabin (FOPS/ROPS):
- Windshield wiper washer
- Window, sliding, operator
- Heater, cabin
- Air conditioning system - modular

POWER TRAIN
Engine exhaust, flow-through filter
Engine exhaust, particulate filter
Engine shutdown system to idle/stop
External stainless steel braided fuel lines
Low transmission oil pressure monitoring
Shielded engine exhaust manifolds
Fast-fill system:
- Coolant
- Engine oil
- Fuel
- Hydraulic oil
- Transmission oil

HYDRAULICS
Heat-shielding on hoses
Hydraulic tank level alarm

AGITATOR
Auxiliary bowl connection points
Chemical dosing tanks
Chemical dosing flowmeters
Remote agitator bow control
Water flowmeter

OTHER OPTIONAL EQUIPMENT
Anti-corrosion protection spray
Centralised service centre
Fire extinguisher, hand held
Fire suppression system - foam
Fire suppression system - dry chemical
Grease lubrication system, centralised manual
Grease lubrication system, automatic
Manual brake release pump
Secondary steering

Notes

Notes

Notes

WR820

Underground Agitator Truck

ELPHINSTONE

Materials and specifications are subject to change without notice.
Featured machines in photos may include additional equipment.

Elphinstone and their respective logos, as well as corporate and product identity used herein, are trademarks of Elphinstone and may not be used without permission.

For further information visit www.elphinstone.com or contact info@elphinstone.com

Made in Australia for export.

SVSB0820-03 Agitator 9/16

p +61 3 6442 7777 w www.elphinstone.com